The standard NPN-X200/X400 display substructure is vertical aluminum tubing with mounting pass-through holes and shims for attachment to a wall or equivalent structure. The panels are self-drilled into the vertical tubes at four points per panel. The tubes must be vertically level, or plumb, on the face and sides, horizontally level on the top/bottom across multiple tubes, vertically flat along each tube, and horizontally flat across multiple tubes.

Steel tubes are not recommended for the substructure, as metal filings can accumulate on the magnets and cause module flatness issues.

Substructure Installation

Tubes come in eight different sizes ranging from one panel high to a maximum of eight panels high. Refer to **Figure 1**. Each panel height has two mounting pass-through holes.

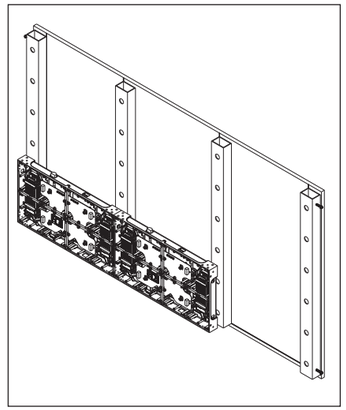

Figure 1: *Tube Type*

1. Attach $^{3}/_{4}$" [19 mm] plywood to the wall before substructure attachment if the holes in the tubes do not line up with studs on the wall. Other wall materials such as concrete should not require $^{3}/_{4}$" [19 mm] plywood, but refer to the contract-specific Shop Drawing for verification.
2. Mark wall for tube positions:
   - **a.** Measure and mark where the bottom of the center tube will land on the wall based on the contract-specific Shop Drawing.
   - **b.** Use a digital level to draw a horizontal straight line from that point. Refer to **Figure 2**. Draw the line to the edges of the display.

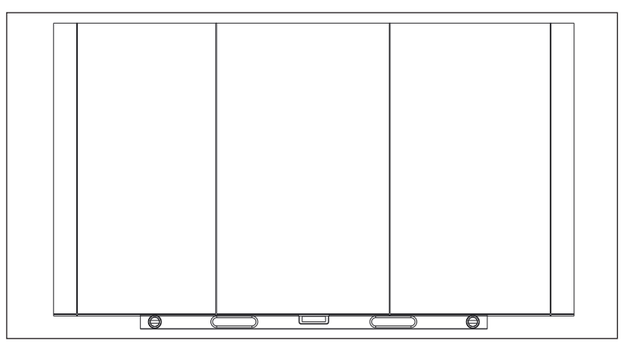

Figure 2: *Use Digital Level to Draw Horizontal Line*

   - **c.** Measure and mark where the sides of the tubes will land along the horizontal line on the wall based on the contract-specific Shop Drawing. Measure each tube location from the same center reference.
   - **d.** Use a digital level to draw a vertical straight line from that point. Refer to **Figure 3**. The line does not need to be longer than 3' [.9 m].

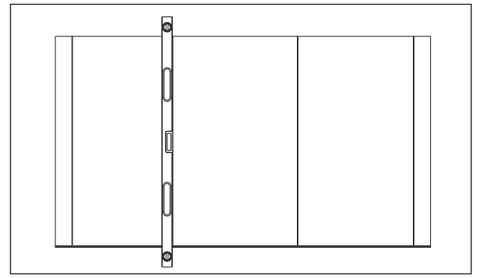

Figure 3: *Use Digital Level to Draw Vertical Line*

3. Install tubes:
   - **a.** Use the horizontal line and corresponding vertical line to position each tube (center tube first). While holding the tube, hold the digital level up to the side of the tube for fine adjustment. Tubes will recess $^{3}/_{4}$" [19 mm] from both the top and bottom of the display.
   - **b.** Use only the top and bottom screw locations in each tube. Refer to **Figure 4**. Drill a pilot hole as needed if a tube screw lands on a stud.

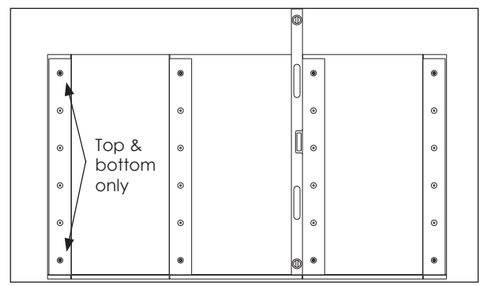

Figure 4: *Use Only Top & Bottom Screw Locations*

For stacked rows of tubes, space the tubes 1-$^{1}/_{2}$" [38 mm] apart from each other and use a digital level to align and level the stack of tubes. Refer to **Figure 5**.

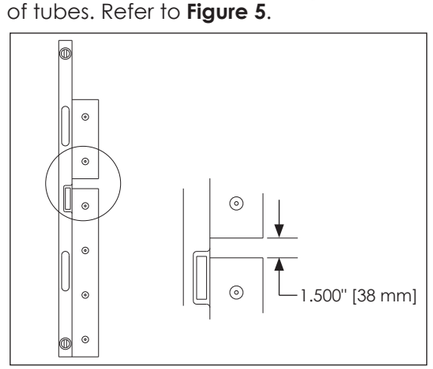

Figure 5: *Space Tubes in Stacked Rows*

   - **c.** Continue until all tubes are installed with two screws per tube.
4. Level tubes:
   - **a.** Use a digital level on the face of each tube to ensure the tubes are plumb.
   - **b.** Place the supplied shims to shim between the tube and wall until the tube is plumb. Two thin shims equal one thick shim. Use one thick shim in place of two thin shims to prevent running out of thin shims before the tubes are level. Refer to **Figure 6**.

> **Note:** Orient the shims on the end tubes so the tail/tag sticks out behind the display and out of sight when the display is fully installed. Refer to **Figure 7**.

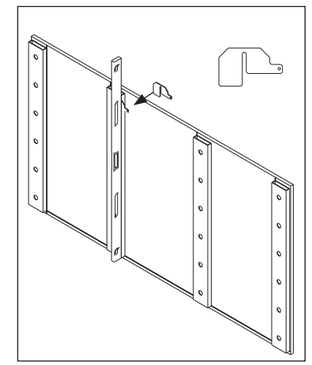

Figure 6: *Use Shims between Tube & Wall until Tube Is Plumb*

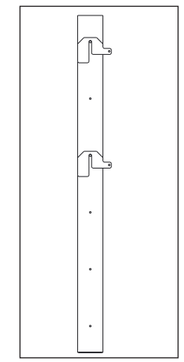

Figure 7: *Shim Orientation*

   - **c.** Tie a string line across the top and bottom of the tubes. Use the supplied $^{1}/_{4}$" TEK screws on the sides of the tubes for temporary string anchors.
   - **d.** Use the supplied shims to ensure all tubes are in line and level to each other. Refer to **Figure 8**. Double-check the tube plumbness as tubes are adjusted using the string line. Each individual tube should be level within $^{1}/_{4}$" [6 mm]

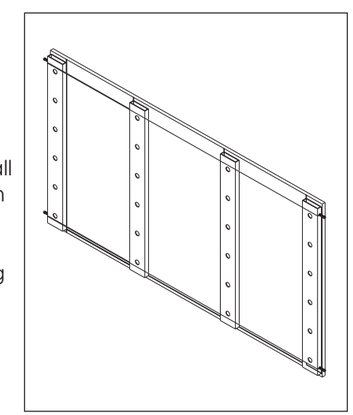

Figure 8: *Use Shims between Tube and Wall until All Tubes are in Line and Level*

1. Finish tube installation:
   - **a.** Start the remainder of the screws in the empty screw holes, but do not tighten down.
   - **b.** Install shims on loose screw hardware so the tube does not flex when screws are tightened down.
   - **c.** Tighten the screws.

201 Daktronics Drive
Brookings, SD 57006-5128
www.daktronics.com/support
800.325.8766

Panel Installation

Power/Signal Identification and Routing

1. Identify which panels will require power and/or signal inputs. Refer to the contract-specific Shop and Riser Drawings for details.
2. Route power/signal inputs around the structure prior to panel installation. Use the designed gaps between the vertical tubes and at the top and bottom of the display to run the cables horizontally across the display. Refer to **Figure 9** and **Figure 10**.

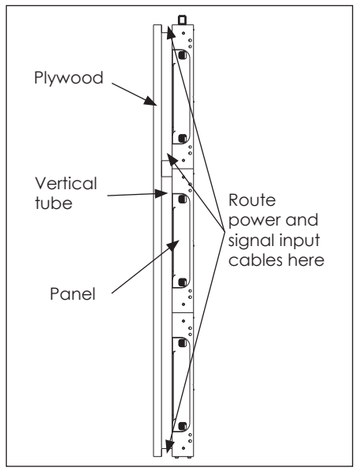

Figure 9: *Power & Signal Routing (Left View with Panels)*

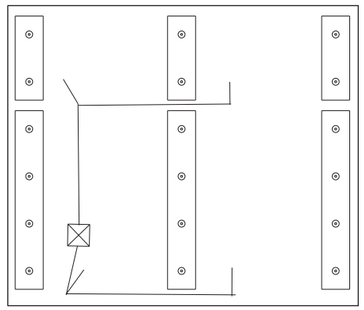

Figure 10: *Power & Signal Routing (Front View without Panels)*

First Panel Installation

The bottom-center panel is typically the first panel installed.

> **Note:** If the display uses panel-embedded PLRs, identify the PLR panels using the two "**PLR**" labels. Refer to **Figure 11**. Refer to the contract-specific Signal Interconnect Drawing to position the PLR panels appropriately within the display.

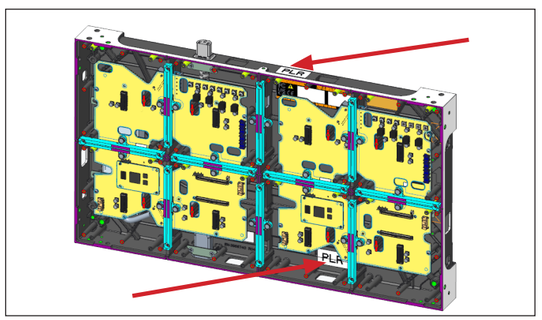

Figure 11: *Panel Identified With PLR Labels*

1. Measure and mark the correct panel location. Refer to **Figure 12**.
2. Remove the panel from its packaging
3. Mark the mounting holes in the panel for pre-drilling. Refer to **Figure 13**.
   - **a.** Slide the panel positioning jigs into the bottom of the mounting tubes with the jigs on the inside edge of the tube. Refer to **Figure 14**. The panel will sit on the punched edge of the positioning jig, using the bottom of the tube to set the location. Refer to **Figure 15**.
   - **b.** Use C-clamps to secure the bottom of the installation jigs to the bottom of the mounting tubes. Refer to **Figure 16**.
   - **c.** Level the jigs and adjust as needed.
   - **d.** Lift the panel into place.

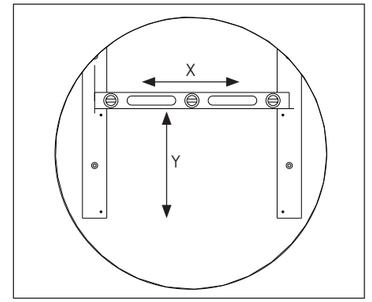

Figure 12: *Measure and Mark First Panel Location*

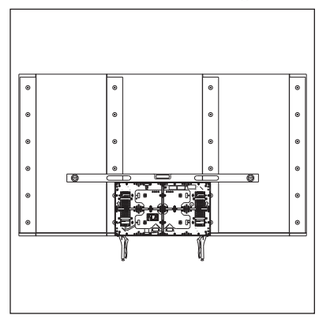

Figure 13: *Mark Mounting Holes in First Panel*

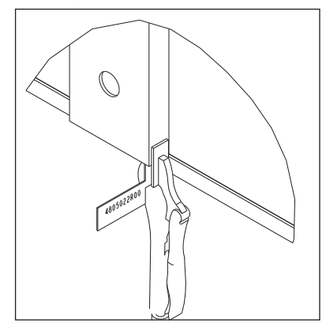

Figure 14: *Slide Jigs into Bottom of Mounting Tubes*

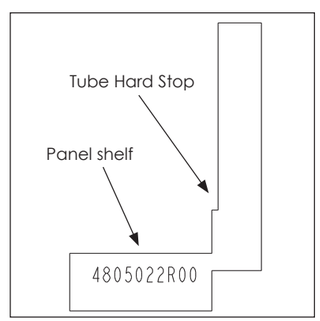

Figure 15: *Set Panel Location*

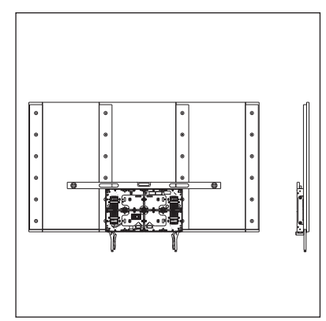

Figure 16: *Secure Installation Jigs to Mounting Tube*

   - **e.** Align the panel to the marked location and verify the location is level.
   - **f.** Hold the panel in place and mark the screw locations through the mounting screw holes with a punch.
   - **g.** Remove the panel and set it aside to keep it clear of metal filings.
4. Pre-drill $^{13}/_{64}$" [5 mm] holes into the tube at the marked mounting locations. Refer to **Figure 17**.
5. Identify where power will enter the display *prior to panel installation*.
6. If installing a panel where power/signal needs to land, route the Cat 6 or Fiber incoming signal cable and/or the male end of the AC power input cable through the rectangular cutout in the panel prior to panel installation.

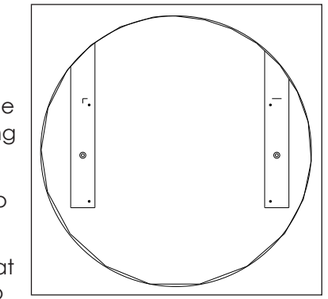

Figure 17: *Pre-Drill Holes into Tube*

> **Note:** Depending on the structure and access to the rear of the display, it may be very difficult or impossible to route power cables into the panel after the panel is secured to the tube.

   - **a.** Remove the two nuts (circled in red in **Figure 18**) securing the appropriate cover on the inside of the cabinet.
   - **b.** Use a Phillips screwdriver to remove the two screws securing the power cable and the mounting bracket at the bottom of the panel. Refer to **Figure 19**.
   - **c.** Install the power input cable through the rear of the panel and plug in the cable. Refer to **Figure 20**.
7. Secure the panel to the tubes with a $^{1}/_{4}$" TEK screw through all four corner mounting locations. Refer to **Figure 21**.

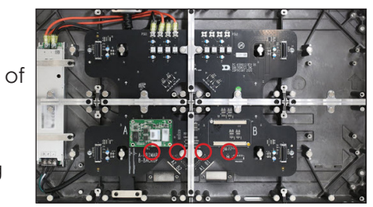

Figure 18: *Remove Nuts From Cover*

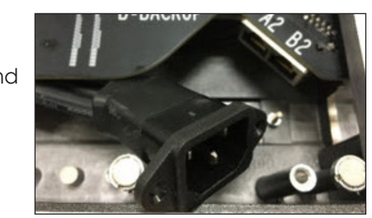

Figure 19: *Remove Screws from Mounting Bracket*

Figure 20: *Install Power Input Cable*

Figure 21: *Secure Panel to Tube*

201 Daktronics Drive
Brookings, SD 57006-5128
www.daktronics.com/support
800.325.8766

8. Use a 5 mm Allen wrench to adjust the jacking hardware (circled in red in **Figure 23**) and correct any plumbness issues. Refer to **Figure 22** and **Figure 23.**

Figure 22: *Ensure Panel is Level and Vertically Plumb*

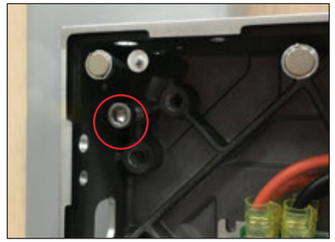

Figure 23: *Adjust Jacking Hardware*

Panel Hardware Adjustment

Only make small adjustments to the jacking and securing hardware.

Pull Panel Corner to Structure

1. Loosen the jacking hardware. This may pull the panel closer to the structure.
2. Tighten the securing hardware. This pulls the panel closer to the structure until it contacts the panel adjustment screws on the rear of the panel.

Push Panel Corner from Structure

1. Loosen the securing hardware. This may push the panel away from the structure.
2. Tighten the jacking hardware. This pushes the panel away from the structure until it touches the head of the securing hardware.

Secure Panel Corner Spacing

1. Secure the corner in place to prevent movement after the desired depth is achieved.
2. Tighten both bolts until they touch the panel or tube.

Panel Connection

Connect Panels Side-to-Side

1. Remove the panel from its packaging.
2. Place the panel beside the existing panel.
3. Remove the panel positioning jig from the right side of the first panel to use on the left side of the new panel.
4. Install the panel positioning jigs adjacent to the first panel and use a level across the jigs.
5. Place a panel on top of each of the two existing panels.
6. Use a 5 mm Allen wrench and socket-head stitch screws to attach the panels together, but do not tighten the screws. Refer to **Figure 24**.
7. Use a 6 mm Allen wrench to attach the flattening jig to the front of the panels, and ensure the panel faces are completely flush. Refer to **Figure 25** and **Flatten Panels (p.4).**
8. Install the top and side interconnect hardware.
9. Use a 5 mm Allen wrench to tighten the jacking hardware next to the existing panel until the panel is firmly seated against the tube. Refer to **Figure 23**. Tighten the remaining adjustment hardware until it touches the tube.
10. Mark the screw locations through the mounting screw holes with a punch.
11. Pre-drill $^{13}/_{64}$" [5 mm] holes into the tube at the marked mounting locations. Refer to **Figure 17**.
12. Secure the panel to the tubes with a $^{1}/_{4}$" TEK screw through all four corner mounting locations. Refer to **Figure 21**.
13. Ensure the panel is flush and flat to the lower panels:
    a. Check seams to verify flushness.
    b. Verify flatness by laying a 4' level across the face to ensure the combined face of both panels is straight and flat. Check both ends of the panel. Refer to **Figure 26**.
    c. Use a 5 mm Allen wrench to adjust the jacking hardware as needed to modify the four corners of panel depth.

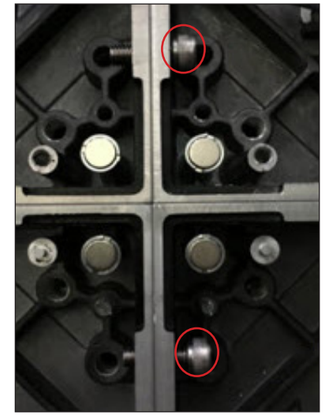

Figure 24: *Assemble Panels with Screws*

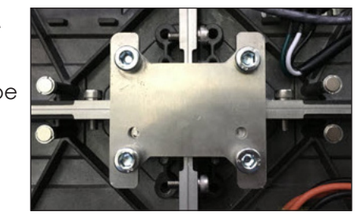

Figure 25: *Align Panel Faces*

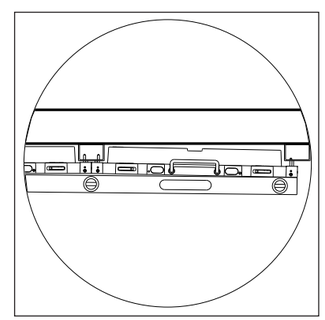

Figure 26: *Verify Flatness*

Connect Panels Top-to-Bottom

1. Remove the panel from its packaging.
2. Place the panel on top of the existing panel, fitting the alignment pins into the recesses.
3. Use a 5 mm Allen wrench and socket-head stitch screws to attach the panels together, but do not tighten the screws. Refer to **Figure 27.**
4. Use a 6 mm Allen wrench to attach the flattening jig to the front of the panels, and ensure the panel faces are completely flush. Refer to **Figure 28** and **Flatten Panels (p.4)**.
5. Use a 5 mm Allen wrench to tighten the socket-head screws, but do not remove the flattening jig. Refer to **Figure 28**.
6. Use a 5 mm Allen wrench to tighten the jacking hardware next to the existing panel until the panel is firmly seated against the tube. Refer to **Figure 23**. Tighten the remaining adjustment hardware until it touches the tube.
7. Secure the panel to the tubes through all four corner mounting locations. Refer to **Figure 21** and **Figure 29**.
8. Use a 6 mm Allen wrench to remove the flattening jig.
9. Ensure the panel is flush and flat to all adjacent panels.
    a. Check seams to verify flushness.
    b. Verify flatness by laying a 4' level across the face to ensure the combined face of both panels is straight and flat. Check both ends of the panel. Refer to **Figure 30**.
    c. Use a 5 mm Allen wrench to adjust the jacking hardware as needed to modify the depth on the four corners of the panel.

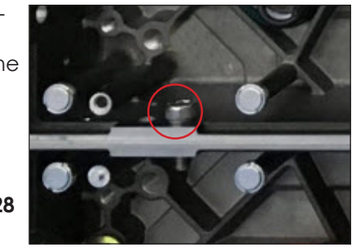

Figure 27: *Assemble Panels with Socket-Head Screws*

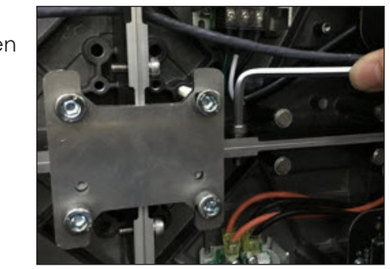

Figure 28: *Align Panel Faces*

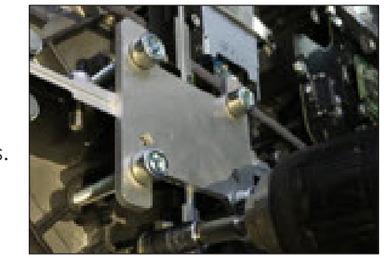

Figure 29: *Secure Panel to Tube in Corners*

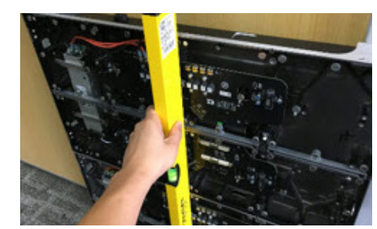

Figure 30: *Verify Flatness*

201 Daktronics Drive
Brookings, SD 57006-5128
www.daktronics.com/support
800.325.8766

Flatten Panels

Complete these steps if additional panel flattening is needed.

1. Identify the center of the display and choose a vertical panel seam at or near that location.
2. Install the first two flattening jigs in the START locations in **Figure 31.**

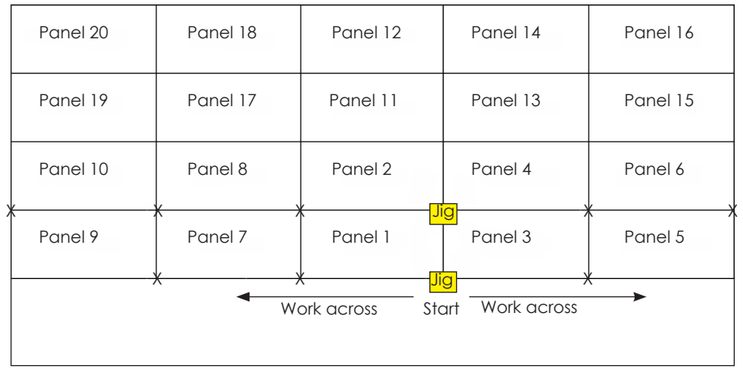

Figure 31: *Install Flattening Jigs*

3. Install the next two flattening jigs on an adjacent vertical panel seam.
4. Work horizontally across the display in one direction, adjusting the Z-axis panels at the X locations in **Figure 31**. Bring the center-most jig in front of the other two jigs while working across the display. Refer to **Figure 32.**

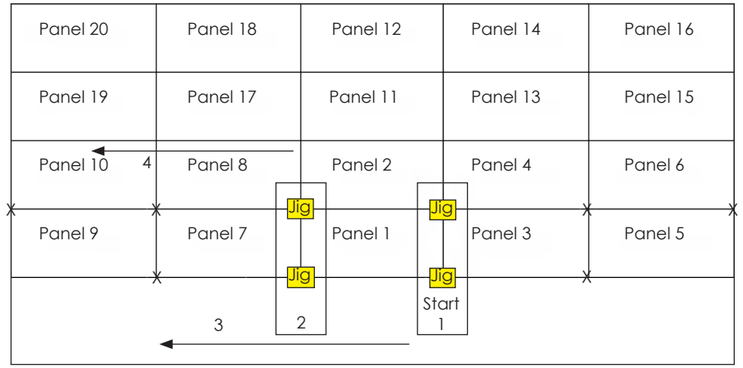

Figure 32: *Adjust Z-Axis Panels*

5. Go back to the center and work across the display in the other direction, adjusting the Z-axis panels in the X locations in **Figure 31.** Bring the center-most jig in front of the other two jigs while working across the display. Refer to **Figure 32**.
6. Move the flattening jigs up to the next two horizontal seams and repeat **Step 3**.
7. Continue up the display until all panels are adjusted and flat.

201 Daktronics Drive
Brookings, SD 57006-5128
www.daktronics.com/support
800.325.8766